YUANSHIN

YP5000 SERIES SOFT STARTER

User Manual

Preface

Thanks for choosing Yuanxin Electric Tech CO., Ltd of the soft starter YP5000. The starter used to control the rattrap type three-phase asynchronous motor start and stop. Before using it, please read this manual carefully so as to guarantee correct operation.

⚠ Caution

- Please read the manual carefully before installating of the product in order to ensure correct installation and operation. The soft starter parameters must be changed by professional personnel;
- Only professional and technical personnel is allowed to install of YP5000 series soft starter;
- Must guarantee power match between the motor and YP5000 series soft starter, please be sure to operate according to the user manual;
- Do not connect capacitor to the soft starter output, or it will cause damage of the soft starter;
- Please wrap the input and the output of the copper wire with insulating tape after installation;
- Must lock the keyboard when using remote control;
- Soft starter housing must be fixed to the ground;
- Please cut off the line power when maintaining.

Although this manual is edited and proofread very carefully, there may still be small mistakes. The features and operation may be different from the actual product due to possible modification of product design, and this may not be considered in the contract. Thank you very much for your understanding.

Contents

1 Notes

1.1 Inspection

Please carry out checks on the products after they arrive, if the product is found defective or not a correct model, please contact your vendor or Yuanxin directly.

- Check on the nameplate, confirm the specifications of your order;
- Check if there is any damage on the appearance during transport, such as the bending of the shell and fuselage and the damage or loss of the components;
- In addition to soft starter, there are also a user manual and a product inspection certificate ;
- Must lift the body of the soft starter in handling. It can not promote the circuit board control box, or it may cause damage or personal injury.

1.2 Nameplate

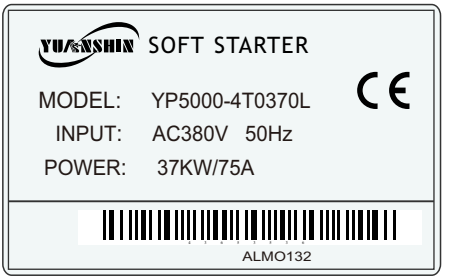

1.3 Soft Starter Model

YP5000 – 4 T 0370 L

❶ ❷ ❸ ❹ ❺

Key	No.	Content
Abbreviation	❶	YP5000
Voltage level	❷	2 : 220V 4 : 380V
Input voltage	❸	S : Single T : Three phase
Power adapter	❹	5.5KW~500KW
Load type	❺	L : Heavy load type M : Light load type

1.4 Product Apperance

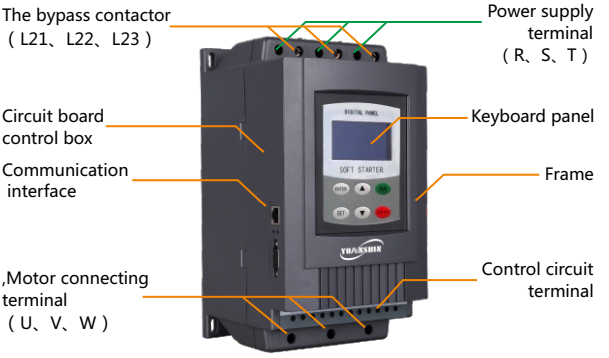

2 Installation and Connection

2.1 Environment

Items	Contents
Standard	Conforming to：(GB14048.6-98)
Three-phase supply voltage(VAC)	380V±15%
Frequency	50Hz
Applicable motor	Squirrel cage three-phase asynchronous motor
Start frequency	Depending on the load, it is recommended that no more than 20 times per hour.
The protective level	IP40(Negotiable)
Shock resistance	15G11MS
Vibration resistance	Altitude above 3000M, vibration force device 0.5G below.
Ambient temperature	-10℃ to +40℃ w/o derating (between 40℃-60℃, rasing each 1℃ will cause 1.2% current derating)
Storage temperature	-25℃~70℃
Ambient humidity	90% RH in Max. (no dewing)
Maximum operating altitude	1000 m without derating (above this, derate the current by 0.5% for each additional 100 m)
Cooling	Natural air cooling
Maximum installation angle	No requirement

2.2 Installation Requirments

- The soft starter should be installed vertically, do not flip, ramp or horizontal installation. Use screws to secure the structure.
- For vertical installation of soft starter, adequate cooling room should be left, so as to ensure effective cooling, see following drawing for details.

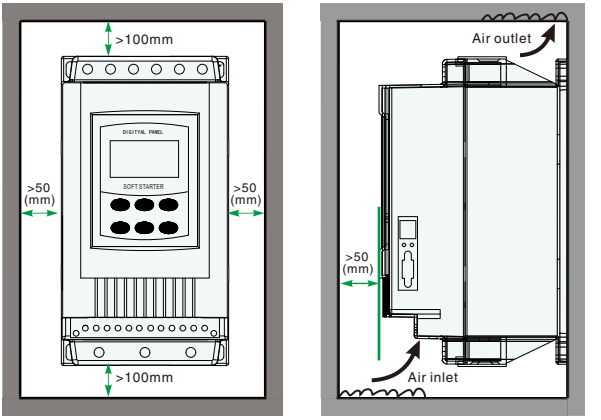

PIC 2-2-1

2.3 Wiring

- Please note the following instructions when wiring. Fig. 2-3-1 is the basic wiring diagram.
- The power supply should be connected to the main circuit, power supply terminals R, S, T require no phase sequence. If the power supply is connected incorrectly, the soft starter will be damaged;
- Ground terminal must be well grounded, can prevent electric shock or fire accident and reduce noise;
- Both ends of the wire must be pressed to ensure high reliability of connection.

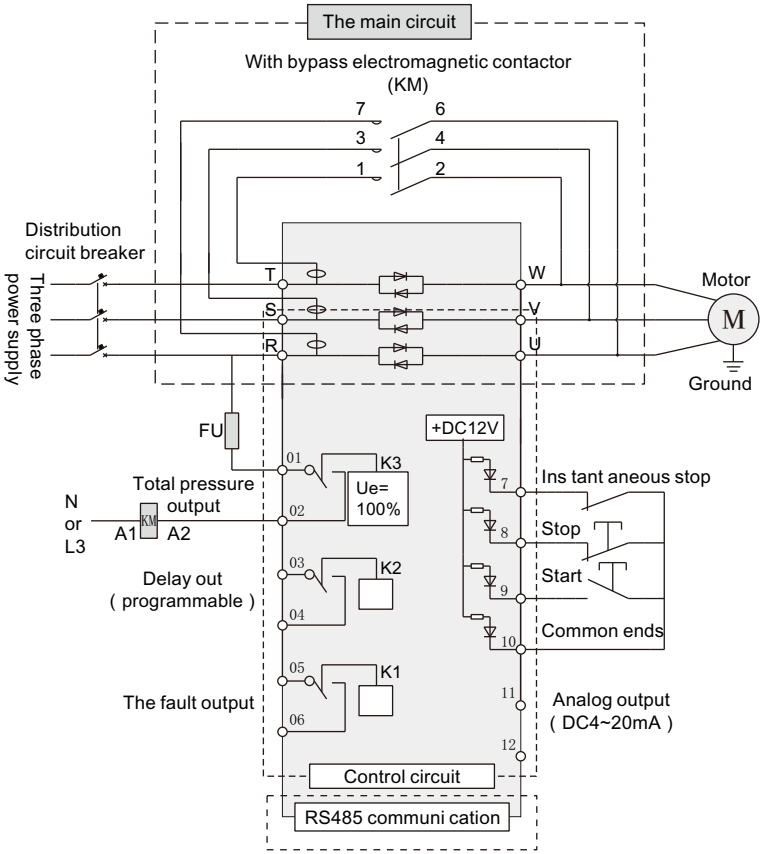
The main circuit
With bypass electromagnetic contactor
(KM)
7
6
3
4
1
2
Distribution
circuit breaker
Three phase
power supply
T
S
R
W
V
U
Motor
M
Ground
FU
+DC12V
01
K3
Ue=
100%
Total pressure
output
N
or
L3
KM
A1
A2
02
7
Ins tant aneous stop
8
Stop
Start
9
03
K2
Delay out
(programmable)
04
10
Common ends
05
K1
The fault output
06
11
Analog output
(DC4~20mA)
12
Control circuit
RS485 communi cation

Fig. 2-3-1

2.4 Main Circuit and Terminal

Terminal Symbol	Terminal Name	Description
R. S. T	AC Main Circuit Power Input	Connected with three-phase AC Power Supply
U. V. W	Soft Starter Output Terminal	Connected with three-phase asynchronous electric machine
L21. L22. L23	External Bypass Contactor Terminal	Connected with bypass contactor
⏚ G	Grounding Terminal	Grounding

Table 2-4-1 Main circuit and terminal wiring

Main circuit power input terminals(R. S. T)

1. Main circuit power input terminals R, S, T are connected to the three-phase AC power supply by line protection circuit breakers or circuit breakers with leakage protection regardless of the connected phase sequence.

2. Don't use the main circuit power ON / OFF method to control the soft start operation and stop. After the soft starter is energized, select the control terminal on the soft starter or the RUN and STOP keys on the keyboard panel to control.

3. Do not connect with single power supply.

Soft starter output terminals(U. V. W)

1. The soft starter output terminals are connected to the three - phase motor in the correct phase sequence. If the direction of rotation of the motor is not correct, you can exchange any two phases wiring of U, V, W.

2. The soft starter output side can not be connected to the phase-in capacitor and the energizing absorber.

3. When the line between the soft starter and the motor is long, the distributed capacitance between the wires will produce a large high frequency current, which may cause the soft start overcurrent trip, the leakage current increases, and the current display accuracy is poor. Therefore, it is recommended that the motor connection should not exceed 50 meters.

Bypass connection (L21. L22. L23)

Bypass connection terminals L21, L22, L23, be sure to connect the electromagnetic bypass contactor, otherwise it will burn the soft starter. Soft starter start is completed, the main circuit power device (SCR) exit, while bypassing the electromagnetic contactor work, then the motor into normal operation, phase sequence can not be wrong.

Soft starter ground terminal (G)

For safety and noise reduction, the ground terminal ⏚G of the soft starter must be well grounded.

⚠ Danger

- Confirm the input phase number of the soft starter, the rated input voltage and the phase number of the AC power, voltage value is the same;
- Don't connect AC power supply to the output terminals(U. V. W);
- Bypass electromagnetic contactor must be connected to the phase sequence connection;
- Otherwise it may damage the accident.

2.5 Main Circuit Wiring Diagram

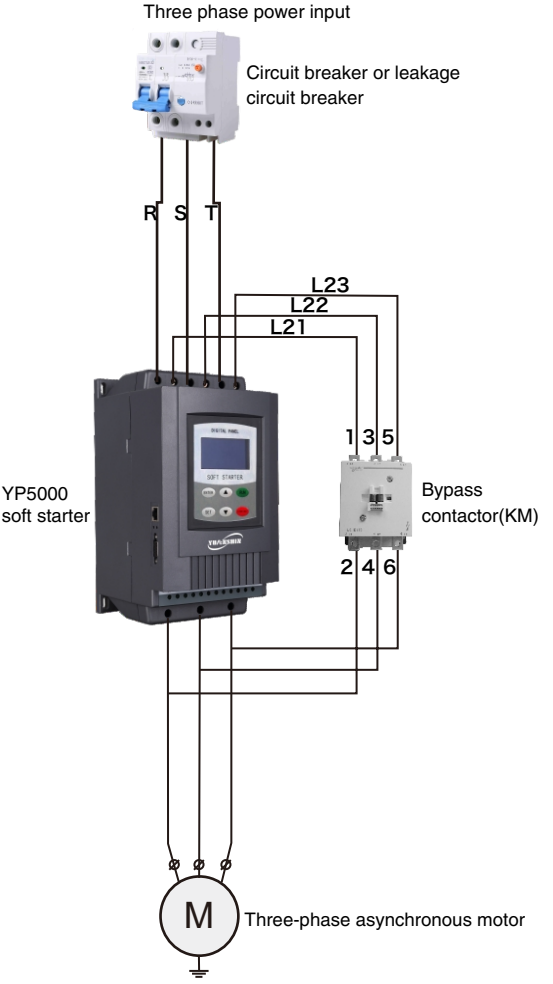

2.6 Control Terminal Connection

Control circuit terminal function Table 2-6-1, according to the different function settings, control terminal function and connection is also different.

Classi-fication	Terminal mark	Terminal name	Description
Contact output	01. 02	Bypass output	Terminal 1. 2 is bypass output which is used to control bypass contactor 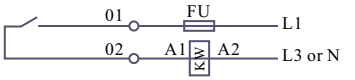
	03. 04	Run output (Delay)	Terminal 3. 4 is programmable relay output, delay time set by the code F4, output function time set by the code FE. This terminal is normally open passsive pot. Capacity is AC250V/5A.
	05. 06	Fault output	Terminal 5. 6 is error output: which will clsse when soft starter error or power lose, Capacity is AC250V/5A.
Contact input	07	Transient stop input	The motor will stop immediately when 07 and 10 turned off (or in series with other protector closed point).
	08	Soft stop input	The motor will slow down and soft stop when 08 and 10 turned off (or stop by itself)
	09	Start input	The motor will start to run when 09 and 10 closed.
	10	Common terminal	Common terminal of contact input signal.
Analog output	11. 12	Analog output	Terminal 11. 12 is 0~20mA DC analog output. Which is used to inspect the motor current. The max 20mA indicates motor current is 4 times of soft starter rated current. Which can be viewed by extra 0-20mA current meter. The max resistor of output load is 300Ω.
Communi-cation	DB	RS485 communi-cation input/output	Rs485 communication input/output terminal, can be used for multiple soft starters connection.

Table2-6-1 Control circuit terminal function table

Contact input terminal

1. When controlling the soft starter start and stop functions with an external terminal, set the code FB to external control.

2. For remote control requirements, it is recommended to use (two wire) control.

3. The contact signal input terminals and common terminals are generally closed/disconnected（ON/OFF）, soft starter, motor and wiring will produce interference, so the line as short as possible (under 20 meters), the cable please use the shielding line.

4. The wiring of the control terminal must be kept away from the wiring of the main circuit as much as possible, otherwise it may cause erroneous operation due to interference.

2.7 Terminal Configuration Diagram

2.7.1 Main Circuit Terminal Drawing

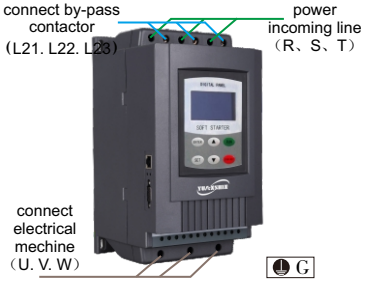

YP5000 series 11KW~75KW

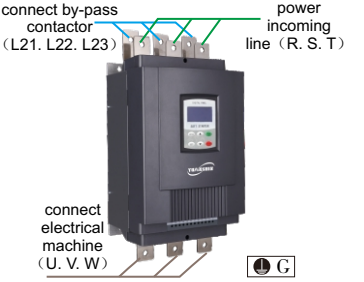

YP5000 series 75KW~800KW

2.7.2 Control Circuit Terminal Drawing

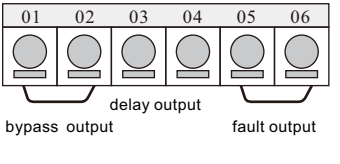

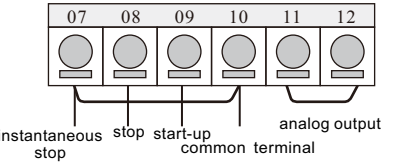

2.7.3 Controlling Circuit Terminal Wiring

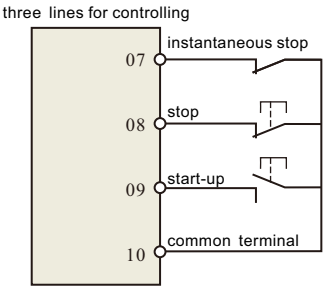

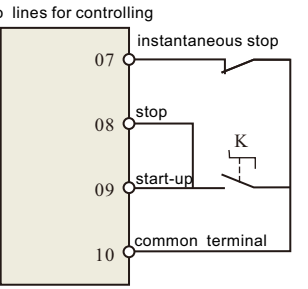

controlling terminal wire0.75-1.25mm2

K closed means start-up, K broke means stop

2.8 Wiring Diagram

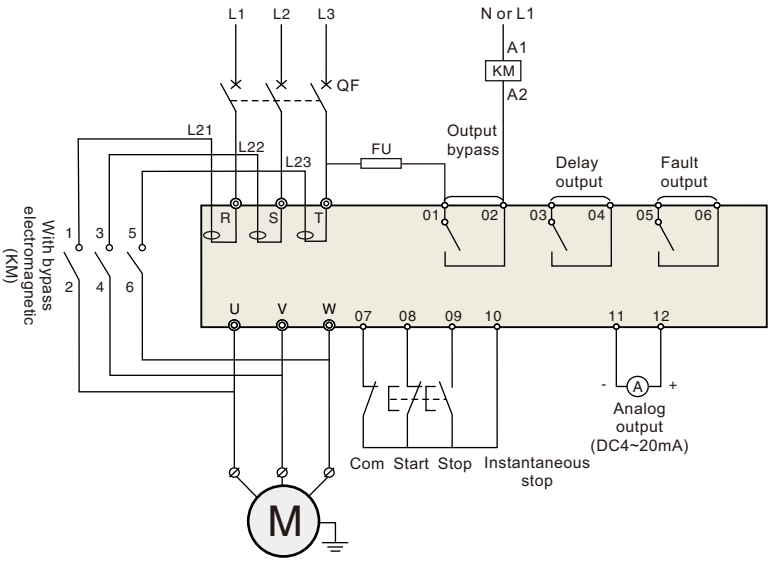

2.9 Relay and Remote Control Wiring Diagram

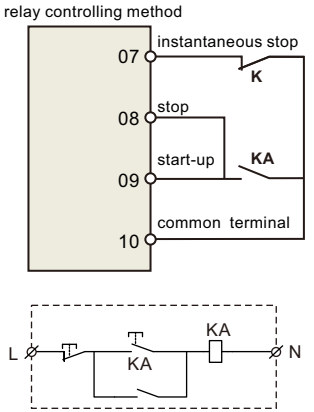

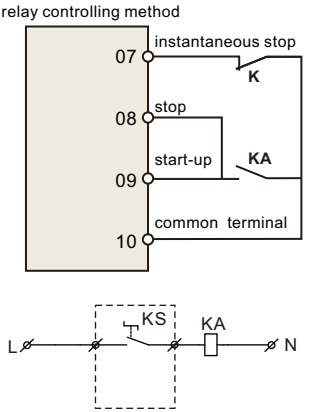

K is the normally closed point (eg. thermal protector) connected to other protector, the factory default setting is short-circuit.

3 Operation

3.1 Inspection and Preparation before Operation

Check and preparation before start are necessary:

- Check if the wiring is correct. In particular, the output terminal can not be connected to the power supply, bypass contactor is connected, and confirm that the ground terminal is well grounded;
- Make sure there is no short circuit or short circuit to ground between terminals or exposed live parts.;
- After receiving the power supply, the keyboard panel displays Yuanxin electric tech and displays <Ready> state.

3.2 Operating Method

- When power on and show <Ready> state, press start button;
- Enter the setting item FP by the rated current value on the motor plate;
- Check the motor after the start if the direction of rotation is correct, the operation is normal, if abnormal, you can press the stop button or cut off the power if necessary;
- If the motor starting condition is not ideal, please refer to page P19 soft starter start mode and application section selection appropriate;
- When the starting voltage code F0 (voltage mode) or the current limit value code F5 (current mode), the motor starting torque is increased;
- After the soft starter is energized, do not open the cover to avoid electric shock;
- In the process of power test run, if found the abnormal phenomena, such as abnormal sound, smoke, or smell, etc., should quickly cut off the power and find out the reason;
- If the fault is displayed after power-up or on startup, and ErrXX is displayed, check the cause according to the displayed fault code;
- Press the stop button or the external control stop button to reset the fault condition.

Note :
When the environment temperature is less than -10 ℃, should preheat more than 30 minutes before start up.

4 Keyboard Panel

4.1 Appearance

The keyboard panel has lots of operating functions such as keyboard panel operation, stop function data validation and change, and various status confirmation function.

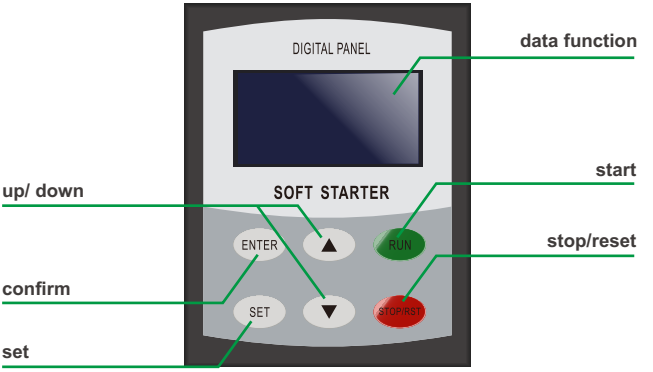

4.2 Key Function

Button	Main function
Start	Display 【Ready】 status. Press this key to start the start, and display the start state, motor current - A
Stop	1. the normal operation shows the motor current - A (current value), press this button to stop, soft stop display (soft stop); 2. the state motor current - A this key to reset the fault status of the function.
Set	Display READY state, press this button to enter the menu settings, display F0:30% or F0:40%,press this button again, the colon flashing, then modify the parameters according to the up/down key.
Confirm	1. When the parameters are modified, press this button to save, show GOOD data to read-in and ring two twice, it means data stored, then press this button or stop button again to exit;

Button	Main function
Confirm	2. Press this button and display input power supply voltage has been input already; 3. Press confirm button to power on, to set parameters to restore the factory value.
Up/Down	1. Enter the menu settings, to press this button to modify parameters (the colon is not flashing, press xx: XXX button to modify function code. The colon is flashing, press this button to modify data). 2. Press this button can be observed A current, P power, H overload heat balance display in the operation.

Table 4-2-1 Button function specification

When digits number > 999 three-digit number, the last decimal light up, means the mantissa zero padding.

There is prompt sound happened in soft starter when press the button, otherwise this button is invalid;

remove the keyboard panel, (put it to the outside of the cabinet) lead distance < 3 meters.

5 Code Setting Functions

Parameter setting code as following table

Code	Name	Setting range	Default Setting	Specifications
F0	Startup voltage	30-80%	30%	startup effective voltage ramp mode; current mode starting voltage is 40%.
F1	Startup time	2-60S	16S	current limit mode invalid
F2	Stop time	0-60S	0S	set 0 as free parking, set 0 when 1 connect two wires
F3	Startup interval delay	0-999S	0S	use the countdown time to delay, set 0 as not delay
F4	Program delay	0-999S	0S	used for programmable relay output
F5	Starting limit current	50-500%	280%	current limit mode is valid, the max voltage ramp mode current limit is 400%
F6	Max working current	40-90%	100%	motor rated current percentage
F7	Under-voltage protection	50-200%	80%	lower than setting value protection
F8	Over-voltage protection	100-140%	120%	value higher than setting value protection
F9	Startup mode	0-5	1	0 limit current, 1 voltage, 2kick +voltage, 4current slope, 5 double closed-loop
FA	Protection level	0-4	4	0 primary, 1 underload, 2 stantard, 3 overload, 4 senior
FB	Operating control method	0-6	1	0 keyboard,1 keyboard+control 2 external control, 3 external control +communication,4 keyboard+ external control +communication
FC	Parameters modification is allowed	0-2	1	specs please refer to P12
FD	Communication address	0-63	0	used for many soft starter communicate with upper computers
FE	Program output	0-19	7	current running relay output （03. 04 terminal)setting
FF	Soft stop limit current	20-100%	80%	specs refer to P21
FP	Motor rated current	---	Rated value	used for inputting rated current

Code	Name	Setting range	Default Setting	Specifications
FU	Underload Protection	---	---	specs refer to P13
FL	Phase-deficient protection	0-3	3	0 Imbalance, phase loss close 1 Imbalance, phase loss open 2 Imbalance, phase loss close 3 Imbalance, phase loss open

Note :

- set the term F6 maximum work is taken to allow the motor to determine the number of FP based on the calculation of the maximum running current, beyond this value will do inverse time thermal protection;
- set the state if more than 2 minutes without key operation, will automatically exit the set state;
- in the soft and soft stop process can not set the parameters, other states can be set parameters;
- if the press key to power on, you can set the parameters (except FE) to return to the factory value.

6 Function Specification

6.1 Code FE Used to Program Running Output Relay Action Time

Programmable relay output function has two modes, that is, programmable timing output mode and programmable state output mode.

When the setting item FE is 0-4 (10-14), the programmable output operates in the timing output mode, and sets the starting time of the output.

The following table:

FE Setting Value	0(10)	1(11)	2(12)	3(13)	4(14)
Programme output moment	Issue startup command	Start to kick-in	Bypass operating	Issue stop order	Stop complete

Table 6-1-1

- This mode of operation includes a 999 second timer, set by setting item F4. If F4 is not 0, the start time set by the setting item FE starts counting;
- Timing to output change state. The reset time of the output is set at time F4, the delay is ended and the operation is maintained for 1 second;
- Programmable timing output is a start-up process for the control cycle, if the motor is automatically restart again.

When the setting item FE is 5-9 (15-19), the programmable output operates in the status output mode, and the set working status output

As follows:

FE Setting Value	5(15)	6(16)	7(17)	8(18)	9(19)
Programme output moment	Malfunction output	Operation status	Prepared status	Startup state	Startup state

Table 6-1-2

- The programmable output mode is used to indicate the operating state of the soft starter. The setting value of the setting item FE is 7, which indicates the preparation status of the soft starter. In this state, the motor can be started. When the programmable output is faulty, (Err05, Err06, Err07, Err08, Err012, Err012, Err015), which is different from ⑤, ⑥ No. fault output terminal function, the operating state is not prepared or fault state, it includes starting, bypass, soft stop three A process.
- When FE> 9, the reset status of the programmable output (③, ④ external terminal) changes from normally open to closed, ie, reverse output. Flexible use of programmable relay output function, can effectively simplify the external control logic lines.

6.2 Code FC Parameter Allowed Modification

- The setting item FC is the parameter selection permission item, there are three kinds:
- When setting item FC is 0, it is prohibited to modify any parameter except setting item FC;
- When setting item FC is 1, it is forbidden to modify the values of setting items F4, F6, FD, FE, FF, FU;
- When setting item FC is 2, it is allowed to modify the data of all settings.

6.3 Code FU Set Underload Protection Function

- When FU < 10, it means banned motor underload protection function;
- Underload protection current range of 10% -90% of the rated current of the motor; determined by the tens digit of the setting item FU;

- The underload protection delay range is 5 to 90 seconds, and the number of bits of the setting item FU is multiplied by 10, and when the number of bits of the FU is 0, the protection action delay is 5 seconds. For example, if the setting item FU=42, it means that the underload current is 40% and the protection action delay is 20 seconds.

7 Revise Setting Parameter

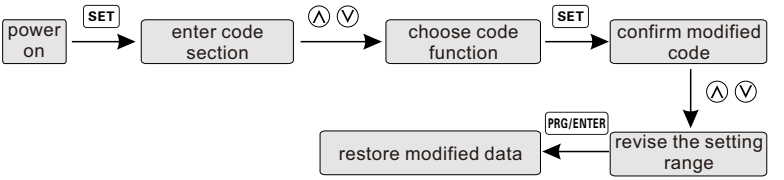

Such as modification (operation control mode for the external terminal control, that is, code FB is set to 2) as an example.

NO.	Operation	Display	Specification
1	Power on	READY mode	Enter YUANXIN ELECTRIC TECH CO., LIMIED "READY"
2	SET	F0 : --%starting voltage	Enter the function code section state
3	UP/DOWN	FB:01	Enter the FB code operating control mode
4	SET	FB:01	Colon flashes, it means can modify the setting range
5	UP	FB:02	External terminal control
6	CONFIRM	Data read-in	Restored the modified data(EXIT)

Table 7-1-1 modify parameter specification

When operating the keyboard, the soft starter has a buzzer.

8 Useful Information

Information may appear on the screen are listed as below

Display	Specification
AC:XXX	three-digital voltmeter for monitoring the voltage of three-phase ac power supply
110V-380V	remind the specs of soft starter is 55KW-380/50H
H1:E05	remind the last fault information is ERR05
H2:E01	remind the last fault information is ERR10
H3:E06	remind the fault information ERR10 happened before
---	---
H9:E00	remind there is no fault information happened before
UEr4.3	remind the software version is VER4.3
LXXX	the success startup total times
RUNXX	the last time soft start time (no matter whether it succeed or not)
Remarks: H1-H9 use recursive way to store recent happened nine fault information	

Table 8-1-1

- Not under the situation of soft start/soft stop nor enter the setting state, can enter the help information, press CONFIRM button, press the UP/DOWN key to read notice;
- In the condition of help state, press CONFIRM or STOP button can exit from help state.

9 Protection Function

9.1 Protection Function Specification

YP5000 series soft starter has a perfect protection function, which protect soft starters and motor safety use.According to the different conditions, the protection level and protection parameters should be set appropriately when we use the it .

- Soft starter overheating protection: the temperature rose to 80 ℃ ± 5 ℃ when the protection action, when the temperature dropped to 55 ℃ (minimum), overheating protection;
- Input phase loss protection time: <3 seconds;

- Output phase loss protection time: <3 seconds;
- Three-phase unbalance protection hysteresis: <3 seconds; The reference deviation will increase when the load current is less than 30% of the nominal rating of the soft starter, based on a phase current deviation of greater than 50% ± 10%;
- Start Overcurrent Protection Time: Continuous Greater than Code F5 Maximum Operating Current 5x Time Protection Schedule P15: 9-2-1;
- Operation overload protection time: to code F6 maximum operating current as the benchmark for inverse time thermal protection, tripping protection time curve (Figure 9-3-1).
- Low supply voltage protection time: When the power supply voltage is lower than the limit of 40%, the protection action time <0.5 seconds, otherwise below the set value when the protection action time <3 seconds.
- Power supply voltage is too high Protection time: When the power supply voltage is higher than the limit of 130%, the protection action time <0.5 seconds, otherwise higher than the set value protection action time <3 seconds.
- Load short-circuit protection Since the lag time <0.1 seconds, the current is the soft starter nominal rated current of more than 10 times, this protection can not replace the fuse or short circuit protection device.
- When the above time parameter is detected from the detection of the effective signal to the start of the trip protection command, the parameters are for reference only. If the soft start protection function does not meet the requirements of the user, you should add a special protective device to ensure safety.

9.2 Protection Function Setting

To apply in different situation, YP5000 series soft start with five protection levels, namely:

0: primary,

1: light load,

2: standard,

3: overload,

4: advanced, set by code FA;

- Primary protection prohibits the external momentary terminal function, while retaining only overheating, short circuit and start the input phase protection, suitable for unconditional emergency start occasions, such as fire pumps.
- Light load, standard, overload three protection levels with full protection, the difference is that the motor overload thermal protection time curve is different. Motor thermal protection standards are more stringent, and other protection function parameters are the same as standard protection settings.

FA code setting		junior			1 (light load)			2 (standard)			3 (overloading)			4 (senior)			specs
Operating over-load protection level		no			second level			10 level			20 level			10 level			IEC60947-4-2 standard
Startup over-current protection time		no			3S			15S			30S			15S			Use F6 to set 5 times of the starting current
operating overload trip time list	current multiple	3	4	5	3	4	5	3	4	5	3	4	5	3	4	5	the data in the table is typical value
	rip time(s)	4.5	2.3	1.5	23	1.2	7.5	46	23	15	4.5	2.3	1.5	23	12	7.5	

- The code should be set according to the rated current value on the motor plate. Otherwise, the starting current and the protection current will be greatly deviated.
- Code meter The motor current set by FP can not be less than 20% of the nominal current of the soft starter. When the motor code set by the code FP is small, the sensitivity error of the protection trip action will increase.

9.3 Protection and Tripping Curves

According to IEC60947-4-2stantard, the motor thermal protection trip time curve is as follows:

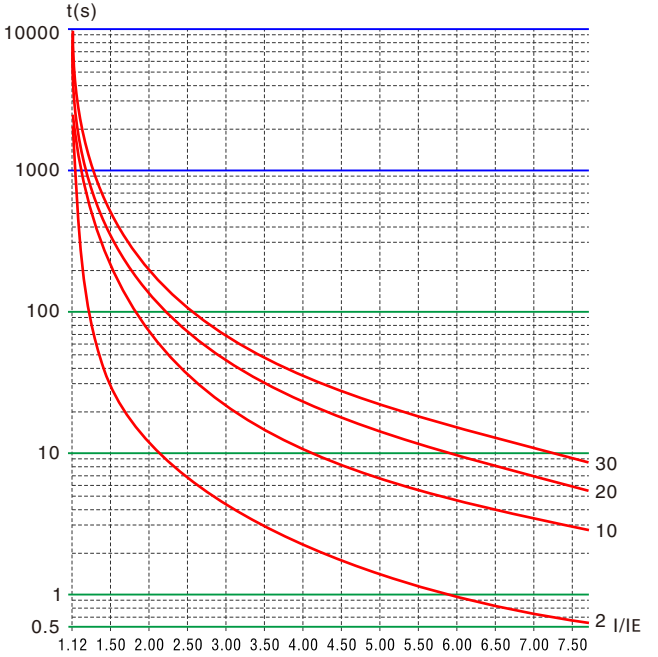

Table 9-3-1 thermal protection trip time curve(heat condition)

10 Protection

When the soft starter is abnormal, the protection function is activated, the trip immediately,the LCD display alarm name and related content please refer to Table 10-1-1.

Display	Desc.	Problem&Solution
Err00	Failure has been solved	Just happened undervoltage, overvoltage or overheating, instantaneous stop terminals are open, such failures, now has been normal, this time to prepare lights,reset to start the motor.
Err01	External terminal momentary Open circuit	Short-circuit connection with the external Instantaneous stop terminal and public terminal; or connecting to other protective devices normally closed contact.
Err02	Soft starter overheating	Start too often or the motor power do not match with the soft starter.
Err03	Starting times too longer than 60 seconds	Starting parameter settings is inadequate or the load is too heavy, the power capacity is not enough ,etc.
Err04	Input phase lost	Check the input or main circuit failure, whether the bypass contactor is stuck in theclosed position and whether the SCR is in open circuit and so on.
Err05	Output phase lost	Check the input or main circuit failure, whether the bypass contactor is stuck in theclosed position and whether the SCR is in open circuit and so on.
Err06	Three-phase unbalanced	Check whther the input three-phase power supply and the load motor is normal.
Err07	Start overcurrent	Whether the load is too heavy or motor power does not match with soft starter.
Err08	Running overload protection	Whether the load is too heavy or setting items F6, FP parameters set incorrectly.
Err09	Supply voltage too low	Check the input voltage or setting item F7 parameter set incorrectly.
Err10	Supply voltage too high	Check the input voltage or setting item F8 parameter set incorrectly.
Err11	Parameters error setting	Modify the settings, or pressing the Enter key on power to restore the factory values.
Err12	Load shortcircuit	Check whether overloading or thyristor short circuit.
Err13	Automatic re-start wiring error	Check whether the outside the control start and stop terminal is connected to 2-wire mode.

Display	Desc.	Problem&Solution
Err14	External stop terminal wiring error	When you allow external control mode, the external control stop terminal is in the open state, which can not start the motor.
Err15	Motor underload	Check the motor shaft and load faults.

Table 10-1-1

11 Troubleshooting

Anomalies	Checking	Countermeasures
Motor not moving	Abnormal wrong wiring Whether the power cord from the input terminals (R, S, T)	Please route properly Power on Power off, and then power on again.
	Whether the bypass contactor is working 01,02 terminal with or without signal	Check the bypass contactor connection Check the connection of the bypass contactor coil
	Whether the keyboard is abnormal display	Please refer to P17 “protection action list”
	Whether the motor is stabilized (load too heavy)	Please release the motor lock (reduce the load)
Keyboard not working	Whether the keyboard has a display 07,10 Whether the terminal is open Check if the code FB settings are normal	No: whether the power supply is missing, check the incoming power supply Yes: check if 10 and 07,08 are open, check the terminal external wiring, correctly set the FB code
Motor rotating Speed not changing	Whether the load is too heavy	Please reduce the load Increase the starting voltage, or start the current
Long start time	The load is too heavy The code does not set up Whether the motor specifica-tions is correct	Please reduce the load Set F0 (start voltage), F5 (start limit current),F1 (soft time) Please check the specifications and signs
Short start time	Light load Startup time is too short	When the load is light, the starting time is often less than the setting value, the starting balance is normal Set code F1 start time (current mode is invalid)

Anomalies	Checking	Countermeasures
Sudden parking in operation	Check the external input terminals	Check whether the 07,10 terminal cable is loose If there is an external protector, check whether the normally closed point is active Check if the external stop button cable is loose

12 Starting Mode

YP5000 series soft starter has six models to suit a variety of complex starter motor and load conditions, the user can choose it as different application.

12.1 Current Limit Starting Mode

- Set Code F9=0. Chart 12.1 shows the current limit mode of the motor starting current waveform changes.I1 is starting current limit by setting, when the motor starts, the output is steadily increasing, Till the motor current I1, and maintain the motor current Is not higher than this value, then gradually as the output voltage increased, it will accelerate the engine, when the engine is on the engine speed, the bypass contactor make actuation, Complete;
- When the engine is lightly loaded or set to a high current limit, the maximum starting current may not reach the set limit value is normal. Current limit starting mode is generally used for strictly limited starting current Requirements of the occasion.;

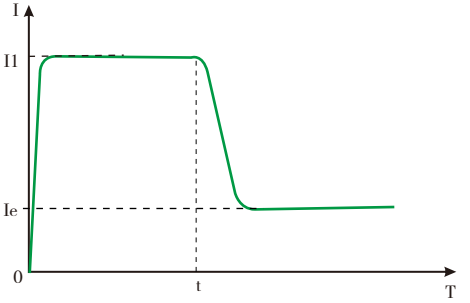

Chart 12-1-1

12.2 Voltage Ramp Start Model

- Set Code F9=1. Chart 12-2-1 shows the output voltage waveform as the voltage ramp start voltage waveform. U 1 is the initial starting voltage of starting, when the motor starts, the current motor does not exceed 400% of rated range, the output voltage of the star start quickly rises to U1, then the output voltage gradually increases by the start parameters setting, The motor is in smooth acceleration according to voltage continuously rise, when the voltage reaches the rated voltage UE, the rated motor speed, bypass contactor act, starting process is complete;
- Starting time T is based on standard load obtained in the standard experimental conditions, control parameters, YP5000 series soft starter is based on this parameter benchmark, by controlling the output voltage, make the motor speed up in a smooth start-up process, not a Mechanical control, regardless of time t. Acceleration is smooth. In view of this, when the load is light, set the start time often less than the starting time, as long as a smooth start is normal;
- In general, the voltage ramp start mode is strictly in line with the current requirement and strictly demanding the smooth start of the occasion.

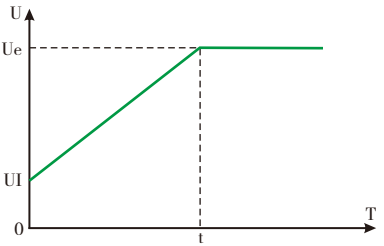

Chart12-2-1

12.3 Kickstart Mode

- Set Code F9=2(kickstart+limit current or =3kickstart+limit current) , Chart12-3-1&chart12-3-2 Set Code F9=1 shows the kickstart mode waveform of the output. In some heavy load situations, due to mechanical effects of static friction, when it can not start the motor, you can use this start mode. At the start, imposing a high fixed voltage to the motor first and last for a limited period of time, to overcome the static load of the motor load to make the motor rotation, and then limit the current or fixed voltage ramp;

- Before using this model, start motor with non-sudden jump model, if the motor can not move due to static friction, then use this model; otherwise avoid to start this mode to reduce the unnecessary high current impact.

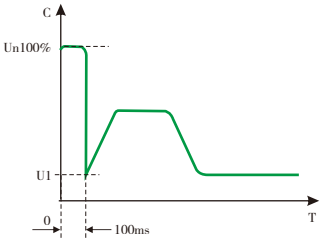

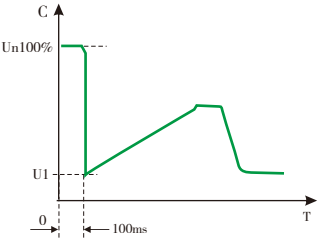

Chart12-3-1

12.4 Current Ramp Start Mode

- Set Code F9=4(smooth current ramp). Chart12-4-1shows the Current Ramp start mode output current waveform, which I1 is the current limit set P6, T1 value is the time set by P1.
- Current ramp start mode has a strong acceleration ability, for bipolar motors, can also shorten the start-up time within a certain range.

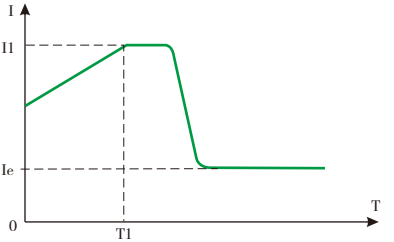

Chart12-4-1

12.5 Voltage Limiting Double Loop Start Mode

- Set Code F9=5(double loop). Double loop starting voltage limiting mode adopt voltage ramp and current limit dual closed-loop control model, is both stable requires and strict current limiting demanding, the integrated starter-limiting mode, it uses the prediction algorithm to estimate the work status of the motor;

- In this start mode, output voltage waveform will be based on the motor and load conditions vary.

12.6 Soft Stop Mode

- YP5000 series soft starters, there are two stop modes, soft-stop mode and free stop mode.
- When do not set F2 to zero, it is for soft stop mode. Chart12-6-1shows the soft stop mode output current waveform, set code F2 as the soft stop time T. In this stop mode, the motor power start from the bypass contactor and switch to the output of soft starter thyristor, soft starter output voltage decrease steadily from the total pressure, reducing the motor speed steady in order to avoid mechanical shock, till the motor stops running. Soft stop output cut-off voltage equal to the initial voltage of starting.
- Soft stop mode can use setting item PL to set the soft stop current limit, in soft stop, reduce the impact of high current, pay attention that, this soft start current limit is a percentage calculated on the basis of starting current limit value.

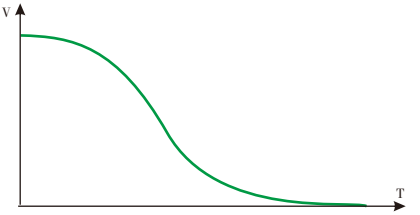

Chart12-6-1

12.7 Free Stop Mode

- Set Code F9 (0)(free stop). In this stop mode, when the soft starter receive the stop command, immediately disconnect the bypass contactor and ban soft starter thyristors voltage output, motor gradually stop as load inertia. In the situation of one drive more wiring, should set soft starter stop mode as this, in order to avoid of the phase fault reporting when output switching;

- Under normal circumstances, if not necessary soft stop, stop mode should be free stop model, to extend the life of the soft starter. As stop model completely ban the instantaneous output, can avoid an instantaneous high-current impact in special applications.

13 Dimension(mm）

13.1 YP5000-4T0110L~YP5000-4T0750M

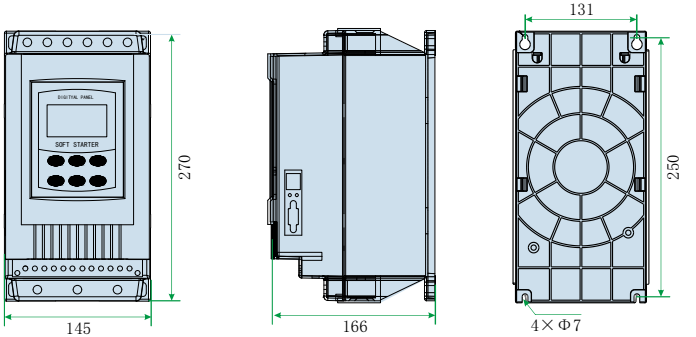

13-2 YP5000-4T0750L~YP5000-4T2000L

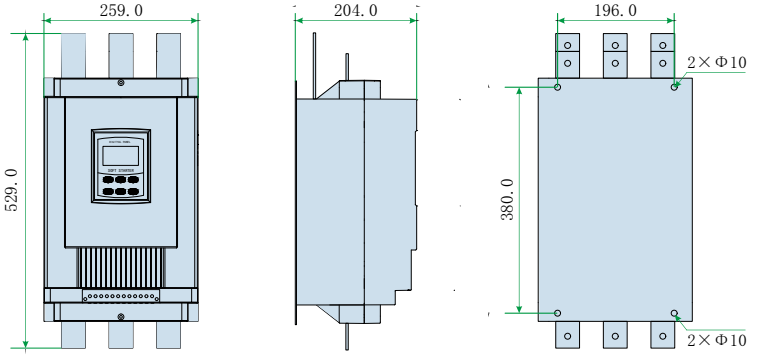

13. 3 YP5000-4T2500L~YP5000-4T3200L

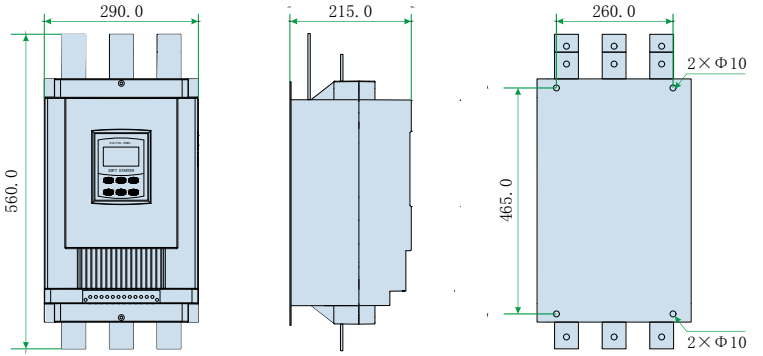

13. 4 YP5000-4000L

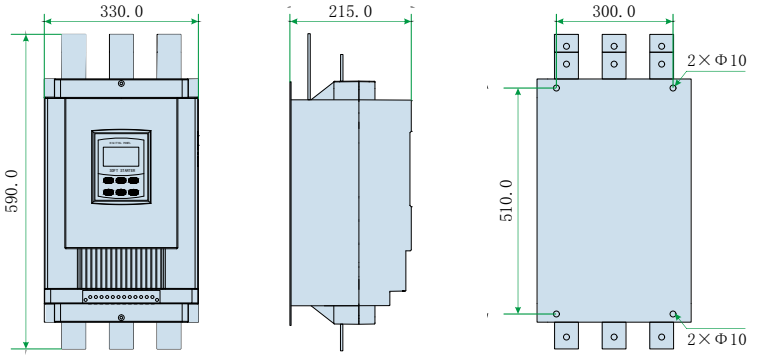

Note :
If the dimensions are subject to change, please make the object as the standard.

14 Application

YP5000 soft starter can meet most requirements for driving heavy loads, the following table for reference only:

Type of load	Start time (seconds)	Stop time (seconds)	Initial voltage	Voltage starting (maximumcurrent limit)	Limit Start
Centrifugal pump	16	20	40%	4	2.5
Ball grinding mill	20	6	60%	4	3.5
Fans	26	4	30%	4	3.5
Light load motor	16	2	30%	4	3
Piston compressor	16	4	40%	4	3
Crane	6	10	60%	4	3.5
Mixer	16	2	50%	4	3
Crusher	16	10	50%	4	3.5
Screw compressor	16	2	40%	4	3
Screw conveyor	20	10	40%	4	2
Belt conveyors	20	10	40%	4	2.5
Heat pump	16	20	40%	4	3

15 RS485 Communication

YP5000 series soft starters through the built-in RS485 standard interface can be connected with the personal computer and PLC for serial communication.

Controlled by the host command to run the soft starter / stop, monitor the operational status of the soft starter and modify its function data, etc.

This communication details, please refer to RS485 operating instructions.

Soft starter can be used for RS485 communications for remote operation by computer, run the command input, run the state administration, more than one soft starter function code data one time input to achieve such a write function code input efforts.

Main functions:

- 1.Running stop command input.
- 2.Status monitoring.
- 3.Real-time tracking (the table shows operating information).
- 4. Function code to one time read, write, save to the documentation.

Communications software, please separate agreement with the our company.

15.1 MODBUS Communication Protocol

15.1.1 About MODBUS RTU Communication Protocol

Modbus is a serial asynchronous communication protocol. Its physical interface is RS485. Modbus is for modicom PLCs and has structural features of PLC. Modbus in the network control, you can compare YP5000 soft starter for a PLC to its read and write. The start and stop control, status information(current, fault, etc.) and function parameters are mapped to the holding register area (4XXX). When the PL master to read and write control.

15.1.1.1 About MODBUS RTU Communication Protocol

RS485 half-duplex

Communication parameters: baud rate: 9600: 8 bits, no parity, 1 stop bit.

15.1.1.2 Communication Data Format

Address Code	Function Code	Data Area	CRC verification
1 bit	1 bit	N bits	2 bits

15.1.2 Related Setting

15.1.2.1 Address Register

Address register	Operation code	Register function specification
40001	06	Control word
40002	03	Status word
40003	03	Average current*10
40004	03	Fault code
40256-40274	03&06	Function code

- The registers unlisted above are illegal and can not be read-write. Otherwise the slave reports an exception code to the controller.
- All data addresses are referenced to 40000. That is, the address of the coil relay 40001 is the address 0001, 402567 is 0100(hexadecimal).

15.1.2.2 Register Address

Soft start only supports the following code, if you use other code, will give the exception code 01.

Code	03	06
Function description	Read register	Write a single register

The code 03 is read only with a single word (WORD)

15.1.2.3 Register Description

40001Command register

Bit	Value	Desc
0	1	Start the starter
	0	Hold mode
1	1	Starter parking
	0	Hold mode
2	0-1	Reset the starter
3-15	0	Unused

For example:

Slave address 02 soft starter, controller issued 02 06 00 01 00 01, if the command is normally executed, return code 02 06 00 01 00 01.

Whether the starter can start normally or check the status register. If there is a fault, should be issued 02 06 00 01 00 04 to give a reset.

Register address 40002 status register.

The status register reflects the state of the soft starter, represented by a word.

Bit	Value	Desc
0	1	startup state
	0	stop mode
1	1	running status
	0	stop mode
2	1	Soft stop state
	0	stop mode
3	1	fault mode
	0	normal mode
4~15	0	unused

Example:

Read Status Register Code 02 03 00 02 00 01

If the starter is starting up, return code 02 03 02 00 01

If the starter fails, return code 02 03 02 00 08, and can read the fault type, read the type of failure.

40003 Current average value (hexadecimal)
This value maps the three-phase actual current average value of the motor * 10 (contains a fraction).

Example: read current value

Send code 02 03 00 02 00 01

If the current is 235A, return 02 03 02 09 2E (return value / 10 for the actual current value).

40004 Fault code (hexadecimal)
When the status register 40002 bit 3 is 1, it indicates that the soft start is in a fault mode. The fault code is consistent with 6.1.

Example: send code 02 03 00 04 00 01

If it returns 02 03 02 00 04, it indicates that the current input is missing (fault code 04).

Soft starter function parameter register40XXX
40256-4027 is for the function register, the corresponding address is 0X0100-0X0112, high byte address is 01, low byte address is 0X00-0X12, the corresponding function code can be read and written. The following examples illustrate their usage:

Example 1: The size of the read function code F5 (current limit)

Send code 02 03 01 05 00 01

Returning F5 function code to 02 03 02 01 5E indicates that the current limit is 350%.

Example 2: Read function code FA (protection level)

Send code 02 03 01 0A 00 01

Returns the value of the read FA function code to 02 03 02 00 03, reading the protection level 3.

Example 3: Rewrite the soft starter function code 05 (starting current) to 250%

Host code 02 06 01 05 00 FA, soft starter return code 02 06 01 05 00 FA; if returned 02 86 03 means can not be written, the starter may be running.

15.1.3 Abnormal Response

Code	Name	Desc.
01	Illegal function	Function code can not be executed, soft starter is not supported.
02	Illegal data address	The received data address can not be executed and the address overflows.
03	Illegal data values	The received data can not be executed 1. the parameter exceeds the limit 2. parameters can not be modified 3. during the operation, the parameters can not be modified

15.1.3.1 Illegal Function Code 01

The master inquires the message format :

Substation address	Function code	Start address High byte	Start address Low byte	Register (G)	Register (D)	CRC correction
0X01	0X08	0X00	0X08	0X00	0X0D	

This protocol does not use the 0X08 function code, so the sub-station replies:

Substation address	Function code	Exception code	CRC correction
0X01	0X88	0X01	

15.1.3.2 Illegal Data Address 02

The master inquires the message format :

Substation address	Function code	Start address High byte	Start address Low byte	Register (G)	Register (D)	CRC correction
0X01	0X04	0X01	0X80	0X00	0X07	

04 function code register address error, so sub-station response:

Substation address	Function code	Exception code	CRC correction
0X01	0X84	0X02	

15.1.3.3 Illegal Data Address 03

The master inquires the message format：

Substation address	Function code	Start address High byte	Start address Low byte	Register (G)	Register (D)	CRC correction
0X01	0X04	0X00	0X80	0X01	0X80	

04 Function code register address error, so sub-station response:

Substation address	Function code	Exception code	CRC correction
0X01	0X84	0X03	

15.1.4 Precautions

- Soft starter communication address, communication rate, test mode must be the same as the controller communication settings;
- If you can not receive the response data, you should check if the related parameters setting, 485 terminal cable connection, CRC correction;
- The connection between multiple TGS5s requires 120Ω at AB ends of the last TGS5;
- When connected with other Modbus devices, wiring is as below:

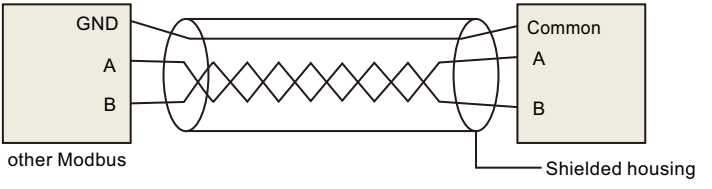

16 External Parts List

The external parts specification from 5.5KW to 55KW:

Motor Parameter		Soft Starter	Breaker	MC	Cable/ copper bar
Power（kw）	Current（A）	Model No.	Model No.	Model No.（Bypass）	Copper core(mm^2)
11	21	YP5000-4T0110L	CM1-63/32	CJ20-25	6
15	28	YP5000-4T0150L	CM1-63/40	CJ20-40	10
18.5	34	YP5000-4T0185L	CM1-63/50	CJ20-40	10
22	42	YP5000-4T0220L	CM1-63/63	CJ20-63	16
30	54	YP5000-4T0300L	CM1-100/80	CJ20-63	25
37	68	YP5000-4T0370L	CM1-100/100	CJ20-100	35
45	80	YP5000-4T0450L	CM1-160/120	CJ20-100	35
55	98	YP5000-4T0550L	CM1-160/160	CJ20-160	35
75	128	YP5000-4T0750M	CM1-225/180	CJ20-160	50
75	128	YP5000-4T0750L	CM1-225/180	CJ20-160	30X3
90	160	YP5000-4T0900L	CM1-225/225	CJ20-250	30X3
115	190	YP5000-4T1150L	CM1-225/315	CJ20-250	30X3
132	236	YP5000-4T1320L	CM1-400/315	CJ20-400	30X3
160	290	YP5000-4T1600L	CM1-400/350	CJ20-400	30X5
200	367	YP5000-4T2000L	CM1-400/500	CJ20-400	30X5
250	430	YP5000-4T2500L	CM1-630/630	CJ20-630	40X5
280	470	YP5000-4T2800L	CM1-630/630	CJ20-630	40X5
320	547	YP5000-4T3200L	CM1-630/700	CJ20-630	40X5
400	725	YP5000-4T4000L	CM1-630/800	CJ20-1000	40X6

The above info is for reference only.

SHENZHEN YUANXIN ELECTRIC TECHNOLOGY CO.,LTD

Add: 6/F, Building 6, Zhongyuntai Tech-Park, Shiyan Street, Baoan District, Shenzhen, China

Tel: 0086-0755-26523920

Fax: 0086-0755-26443893

Hotline: 400-888-2657

http: //www.yuanxindrive.com

V1.0